TEACHING FUNDAMENTALS OF pH-METERS: INSTRUMENT THEORY AND PRACTICE. STEP-BY-STEP ANALYSIS OF A SIMPLE, LOW COST LABORATORY BUILT pH- AND mV-METER

Peter S. Berlot* and Guillermo A. Locascio
Laboratory of Biological Instrumentation - Facultad de Ciencias Exactas y Naturales, Universidad de Buenos Aires, Ciudad Universitaria, Pabellon 2, Buenos Aires (1428), Argentina.

Recebido em 24/2/92; aceito em 24/11/94

A laboratory built pH-meter specially devised for educational purposes is presented. It is made of simple discrete circuits, each performing only one of the operations required to make coincide instrument isotherms with electrodes isotherms in the two-buffers calibration or adjustment procedure. The construction of this instrument is described and the operation principles and instrumental theory of pH-meters are revised and shown by means of the analysis of its building blocks.

Keywords: pH-meters; low cost instrument.

INTRODUCTION

An easy to build, low cost instrument for educational purposes, that can be built at the laboratory, employing common operational amplifiers for each of its building blocks is presented. Each block performs a single, easy to understand operation, thus allowing students to clearly see how each step needed for the high-impedance, low-level signal from an electrode chain to be converted to a correct readout indication of pH can be accomplished. This requires the instrument isotherm to completely superimpose to the electrode isotherm in each case, as is well known.

In order to carry out a correct calibration and measurement, a correct understanding of basic concepts, like isopotential pH (pH_{iso} for short) is required. In the design of this instrument we have chosen for simplicity $pH_{iso} = 0$, contrarily to the currently employed value of 7.00 (or in some older instruments, 8.00). This also makes fully evident that there is not necessarily a relation between the pH_{iso} of the electrodes or the voltage they input to the instrument, and the instrument pH_{iso}. Unfortunately some confusion in this field was aroused because of the design of certain commercial instruments whose controls interact with each other and hence do not allow the classical two-buffers calibration procedure.

As glass electrodes have a very high internal resistance, the first requirement they impose to a pH-meter is obviously an input resistance of not less than two or three orders of magnitude higher[1-4]. The first building block or "front end" allows to have an input resistance of 10^{12} ohms (1 Teraohm) or higher with a MOSFET operational amplifier in a simple voltage follower configuration. This is more than enough for an electrode chain in working condition to be employed, and also adequate for a variety of other low level, high impedance DC voltage measurements. pH and mV data can then be read on the 3 1/2 -digit Digital Multimeter (DMM) used as readout device.

The use of DMM in the Chemistry Teaching Laboratory is very convenient for a variety of purposes and has been suggested among other authors by Sevilla et.al.[1].

For this particular instrument it must be taken into account that pH values will be displayed with its sign changed, i.e., negative lectures must be taken as normal, positive pH values, for deliberately no sign correction has been provided at that point in order to emphasize the frequently overlooked fact that the actual potential of the indicator (glass) electrode lowers when the pH of the solution raises.

CIRCUIT DESCRIPTION (FIG.1)

The first stage is a follower (IC1, MOSFET front end) that provides the very high input resistance needed for DC electrometric measurements, as discussed. It does not invert and it has a unity gain, as is well known.

As indicated on figure 1, the high impedance (glass electrode) input must be shielded. The electrodes can be conveniently connected to the input by means of a BNC connector or other coaxial connector commonly employed for glass (or "combination") pH electrodes. As usual, reference electrode is connected to ground (shield) if separated glass and reference electrodes are used.

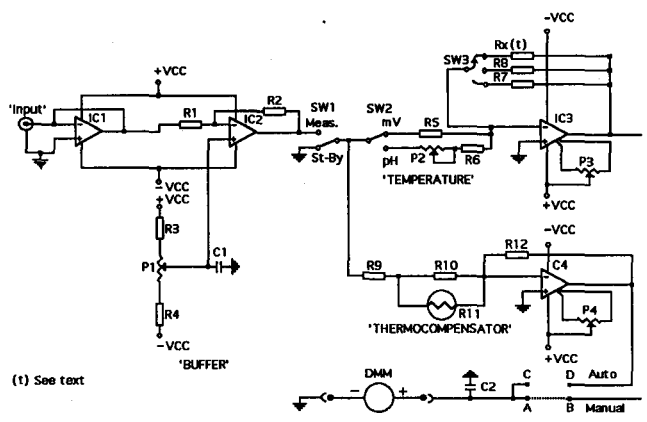

Figure 1. Schematic of the instrument.

The second stage is a voltage adder (IC2), and provides the necessary correction for the asymmetry, liquid junction and other constant potentials, e.g., differences between external reference electrode and internal reference electrode of the glass electrode. The configuration of this stage has unity negative gain. The added voltage is set by P_1, "Buffer" control, inputted at the non-inverting input. This results at the output of IC2 in

* Present Address: SciTec Industries, 17 Fisken Av., Toronto, Ontario M6P 3C1, Canada.

voltage additions of - 800 to + 1000 mV, allowing ample capacity for the instrument isotherms to be displaced parallely, as required in points 1) and 3) of the calibration procedure later described.

SW1 switches from "Stand by" to "Measurement" position.

SW2 switches from "mV" to "pH" measurement position. In the "mV" position the "Temperature" control is disabled.

The third stage is a variable gain amplifier, IC3. Operating in "mV" position, its gain can be selected with SW3 as 1x, 2x or any other value not greater than 10 -selected by the designer as required. For "pH" measurements SW3 must be left on 1x position. If it is desired to build an instrument that measures only pH, SW3, R8 and Rx can be omitted and the feedback resistor of IC3 will be simply R7. The gain of this stage is given by the ratio of the feedback resistor, R7, R8 or Rx, to the input resistors; for "pH" measurements the latter is R6 plus the operating fraction of P2 ("Temperature" control, top-to-top scaled from 0°C to 100°C), whereas for "mV" is R5. P2 allows to change the slope of the instrument as described later on point 2) of the calibration procedure.

P3 is an offset correction potentiometer necessary to obtain 0 mV output at 0 mV input, which in turn is necessary to make inoperative P2 at 0 mV input ($pH_{iso} = 0$).

The slope of the response of an *ideal* pH electrode, also known as Nernst factor, is proportional to the absolute temperature and ranges from 54.197 mV/pH at 0°C to 74,038 mV/pH at 100°C. As the DMM used as readout device has 3 1/2 digits, at the +/- 1999 mV scale, a change of +1 pH unit will be read as a -100 mV change. Therefore the gain of this third stage must be calculated taking this into account.

$$\text{Gain} = -\frac{100\ \text{mV}}{RT \ln(10)/F} = -\frac{R7}{P2^* + R6}$$

where P2* is the actual value of the resistance of the "Temperature" control P2 when adequately set to compensate for isotherm slope at temperature T, e.g., full value of 1 K ohms at 100°C and 0 ohms at 0°C.

The output of IC3 is then fed into the DMM. The scale chosen, ± 1999 mV, allows one to read even high pH values, say 12, as -1200, so a change of 1 mV or 0.01 pH units can be read.

Table 1 lists the parts required to build the instrument.

Table 1.

Parts List	
IC1, IC2	1/2 CD3240 each
IC3, IC4	LF356H
IC5, IC7	LM317
IC6, IC8	LM337
P1	1 K ohms multiturn linear potentiometer
P2	1 K ohms linear potentiometer
P3, P4	25 K ohms multiturn preset
P5, P6, P7, P8	1 K ohms multiturn preset
R1, R2	10 K ohms 1% or better
R3	5 K ohms
R4	5K1 ohms
R5	5 K ohms 1% or better
R6	2710 ohms*
R7	5 K ohms 1% or better
R8	10 K ohms 1% or better
Rx	Exactly x times R7; x not greater than 10
R9	1888 ohms*
R10	840 ohms*
R11	PTC (Philips 2322 660 91001 PTC)
R12	3600 ohms*
R13, R14	10 ohms
T	Transformer, see text
D1, D2, D3, D4, D5, D6, D7, D8	1N4004
C1, C2, C5, C6	0.1 uF ceramic
C3, C4	4700 uF, 50 volt, electrolytic
SW1, SW2	SPDT switch
SW3	make-before-break, single-pole three-positions switch
SW4	DPST switch
F	250 mA fuse
BT1, BT2	NiCd batteries, 8.4 volt (9 volt-size)

All resistors 1/4 watt, 5%, unless otherwise stated.
* A fixed value resistor and a series preset, adjusted to obtain the required value are used.

APPENDIX

A versatile ***power supply*** (figure 2) has been built as an ***optional*** for this instrument, allowing it to be employed as a portable pH-meter (unplugging the transformer from the circuit) or as a bench-top instrument. Two rechargeable 8.4 volt ("9 vot size"), 100 mAh Ni-Cd batteries, BT1 an BT2, and the complementary pair of variable voltage regulators IC7 and IC8 provide the required voltages +Vcc and -Vcc (± 5 V).

Another pair of regulators, IC5 and IC6, are used to provide the current needed to charge BT1 and BT2 through diodes D5 and D7 at a very low final rate ("trickle charge") when a final voltage of 1.4 volt per cell is attained, keeping batteries in an almost fully charged condition. Diodes D5 and D7 also prevent batteries from discharging through regulator resistors P5 and P6 when the power supply is unplugged from the line. Transformer T (any output voltage between 11 + 11 and 22 + 22 RMS volts at 500 mA is adequate), rectifier diodes D1, D2, D3, D4 and filter capacitors C3 and C4 make a classical full-wave rectifier with filter. Diodes D6 and D8 allow IC7 and IC8 to be fed by BT1 and BT2 when the full-wave rectifier is disabled but prevent them from being damaged by an excessive voltage when it is in service (used as a bench-top instrument).

Batteries may be charged and kept fully charged leaving the power supply plugged on AC line and turning off the main switch SW4. Unplugged, the estimated discharging time is

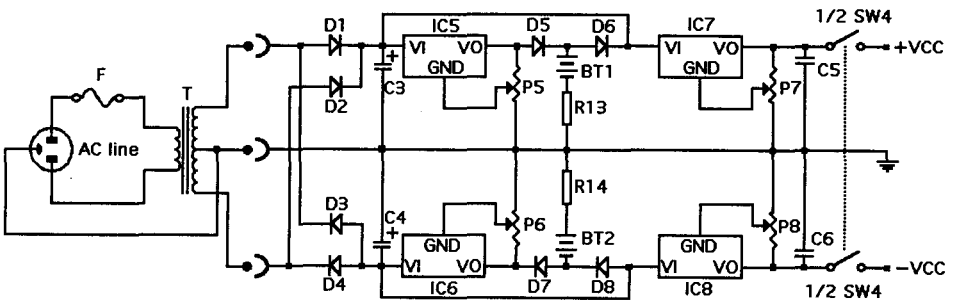

Figure 2. Schematic of the optional power supply.

determined only by the self-discharge time of the batteries themselves; the maximum drain is about 200 μA.

Another ***optional, additional*** feature has been included to allow students to see how an automatic temperature compensator ("Thermocompensator") works and - perhaps more important - to make them clear its limitations. They may realize that the only thing such a device can do is to change the *instrument slope* by rotating about the point of *instrument* pH_{iso}, in this case 0, but can not account for changes in liquid junction potentials and other additive potentials, nor correct for departures from ideal electrode sensitivities. Measurement errors arising from the difference between instrumental pH_{iso} and electrodes pH_{iso} can also be conveniently shown.

This additional device consists of a variable gain amplifier IC4 whose gain is controlled by the resistance of a linearized PTC thermistor network R10 and R11. The higher the temperature, the higher the absolute value of the electrode mV/pH slope, and consequently the lower the absolute value of the gain of IC4 required to compensate for it.

The gain of IC4 is calculated exactly as the gain of IC3, substituting the linearized PTC thermistor network R10 and R11 for P2 ("Temperature" control), R9 for R6 and R12 for R7.

Changing the jumper from A - B to C - D connects the device in place ("Manual" to "Auto"), and disables IC3. Of course, this can be also accomplished by a SPDT switch instead of the jumpers, if preferred. The two-buffers calibration procedure, later described, is no longer possible, and a single calibration buffer is used instead, selecting one whose pH is close to the unknowns to be measured. The sheathed PTC sensor is immersed in the solution along with the electrodes. Measurements of pH at other temperatures can then be made. If desired, further limitations of this procedure can be made clear measuring at two different temperatures a buffer solution whose pH appreciably changes with the temperature, as for example the well-known tris(hydroxymethyl)aminomethane - HCl solutions ("tris-buffers"). Correctly taken measures at 0°C and 50°C of a 0.1 M Tris + 0.05 M HCl solution will differ by about 1.4 pH units but this will not accurately appreciated if working with thermocompensator, mainly because the instrument isotherm will rotate about the instrument pH_{iso} and not about the electrodes pH_{iso}, thus no longer coinciding even if the slopes will be the same. This limitation holds, of course, even with an error-free PTC sensor.

pH-METER CALIBRATION

As is well known[2-3], the steps involved in the two-buffers calibration procedure are:

1) Immersion of the electrodes in the first standard buffer solution of pH_1. Then by means of the "Buffer" control, which sets the amount of voltage that an operational amplifier in voltage adder configuration introduces, a displayed value of pH = pH_{iso} (instrumental) is obtained. This deliberately introduces an error of pH_{iso} - pH_1. In our case, the error is simply -pH_1 as the instrumental pH_{iso} is 0.

-The instrumental isotherm has been displaced without any change in its slope.

This is shown as displacement **A** on the figure 3. The electrodes chain immersed in buffer of pH_1 = 4.0 (rounded value, 0.05 m potassium hydrogen phtalate) generates an EMF = E_1 of ca. 200 mV on electrodes isotherm and is made to read pH_{iso} = 0 on the first modified instrumental isotherm.

2) Now the electrodes are immersed in the second standard buffer solution of pH_2. A reading with the same error as before, i.e., -pH_2, is obtained by means of the "Temperature" (slope) control; the lecture must be therefore pH_2 - pH_1.

- The instrumental isotherm has been rotated about the pH_{iso} point, by means of a change in the gain of an operational amplifier *after* the voltage addition previously made. The slope of the instrumental isotherm has been thus changed, now coinciding with that of the electrodes isotherm. Therefore, they are now parallel but do not superimpose yet.

On the figure 3 it can be seen that an EMF = E_2 of ca. -130 mV, produced by the electrodes in buffer of pH = 9.2 (rounded value, 0.01 m borax), has been made to read pH = (9.2 - 4.0) = 5.2 after displacement **B**.

3) Finally, the correct pH_2 reading is made to appear on the display, adding the required amount of voltage by means of the "Buffer" control, which as previously mentioned operates before the variable gain operational amplifier of point 2).

- The instrumental isotherm and the electrodes isotherm fully superimpose.

This last step and final correction is illustrated as displacement **C**, so the correct reading pH = 9.2 is obtained.

pH determinations with a precision of ± 0.01 units can be performed with this equipment when employed with Radiometer or Metrohm electrodes, e.g., type EA120, using the above

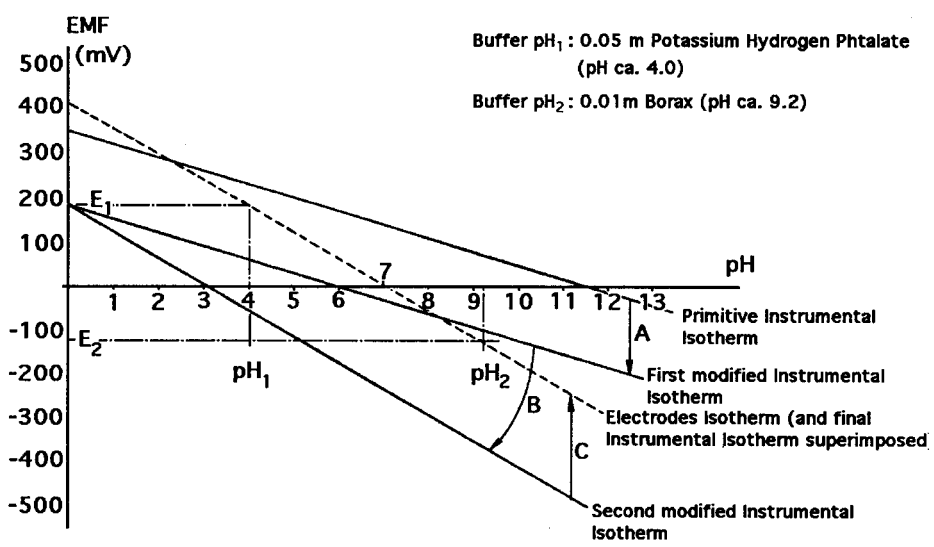

Figure 3. Two-buffers calibration procedure.

mentioned buffer solutions under constant temperature conditions after a stabilization period of about 30 seconds. The lectures remained within these limits during the periods of the measurements performed, no longer than 30 minutes, but no long term stability studies have been carried out, for our purpose was limited to teaching purposes.

Besides, performing the two-buffers calibration allows one to determine the sensitivity factor of the electrodes[2], s%, taking the final temperature reading T_1 on the scale of the "Temperature" control P2 and the actual temperature of the solution. The value of s% is then calculated as the ratio of the absolute temperatures:

$$s\% = \frac{T_1 + 273.15}{T_2 + 273.15} \cdot 100$$

The importance of some ***additional tests*** that should always be performed on commercial pH-meters are very conveniently emphasized and carried out, to make evident fundamental requirements of electrometric measurements, e.g.:

- High input resistance: an adequate low impedance, floating, variable low DC voltage source (0 to 1000 mV) connected to the input of the electrometer should give the same readings whether measured with or without a 1 Gigaohm resistor connected in series.
- Verification of the agreement of the experimentally determined instrument isotherm slopes at different settings of P2 ("Temperature" control dial readings, in mV/pH or °C), with the theoretical values corresponding to these readings according to the Nernst factor, using the above mentioned DC voltage source.

REFERENCES

1. Sevilla III, F.; Alonso, R. L.; Andres, R. T.; *J. Chem. Educ.* (1993), **70**, 580.
2. Bates, R. G.; Determination of pH: Theory and Practice; Wiley: New York, 1964.
3. Linnet, N.; pH Measurements in Theory and Practice; Radiometer A/S: Copenhagen, 1970.
4. Eisenman, G.; Bates, G.; Mattock, G.; Friedman, S. M.; The Glass Electrode; Wiley: New York, 1965.